Description and Application Manual for 2PD300C17 Dual Channel IGBT gate driver

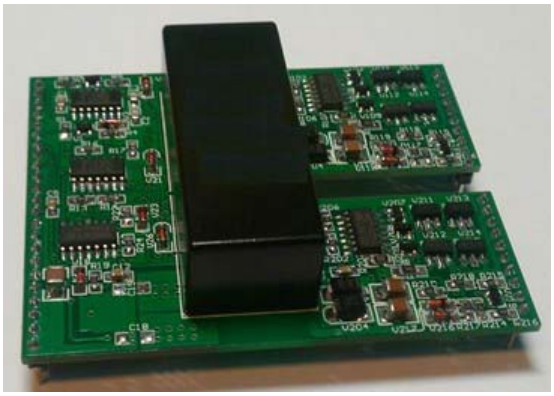

WEPOWER series high power IGBT intelligent driving modules are specially designed for high power IGBT module with high reliability and security.
The products series have been patented in China.

The high power IGBT intelligent module driver released by WEPOWER is easy to use with smart design, high driving power and complete function.

The 2PD300C17 dual channel high power IGBT intelligent module driver is pin-to-pin compatible with 2SD300C17 of CT-Concept and 2ED300C17 of INFINEON.

Applications
※ Inverters
※ Converters
※ Railroad Traction
※ Switch Power Supplies
※ DC/DC Converters
※ Radiology and Laser Technology
※ Research
※ Motor Drive Technology
※ Weapon Equipage

1. Main Features & Technical Specifications

1.1 Main Features

(1) Suitable for driving high power IGBT module
(2) Short circuit, over current and low-voltage protection.
(3) Soft switching
(4) Reliable and durable
(5) High electrical isolation
(6) Switching frequency: 0~100kHz
(7) Duty ratio: 0~100%
(8) Disturbance rejection property: dv/dt >100,000V/us
(9) Integrated internal DC/DC power supply

1.2 Technical Specifications

Drive channel number: 2 channels
VCE: ≤1700V
Rated input voltage: 15V（±0.5V）
Max drive current: ±30A
Internal DC/DC power: 2*4W
PWM input level: 0-15V(COMS)
Rated drive voltage: +15V/-15V

Absolute maximum Ratings			
Symbol	Parameter	Value	Unit
VDD	Primary side input power voltage	16	V
VDC	Primary side input power voltage	15.6	V
V_{iH}	Input signal voltage (high)	VS+0.3	V
V_{iL}	Input signal voltage (low)	GND-0.3	V
$Iout_{PEAK}$	Output gate peak current	30	
$Iout_{AVmax}$	Output average current	150	mA
f_{max}	Max switch frequency	100	kHz
V_{CE}	Collector emitter voltage sense across the IGBT	1700	V
dv/dt	Rate of rise and fall of voltage secondary to signal primary side	50	kV/us
V_{isolIO}	Isolation test voltage input-output (AC,RMS,60S）	4000	V
V_{isol12}	Isolation test voltage output1-output2 (AC,RMS,60S）	4000	V

R_{Gonmin}	Minimum rating for R_{Gon}		1	Ω
$R_{Goffmin}$	Minimum rating for R_{Goff}		1	Ω
$Q_{out/pulse}$	Max. rating for output charge per pulse		18	uC
T_{op}	Operating temperature	2PD300C17I	-40℃～+85℃	℃
		2PD300C17J	-40℃～+105℃	
		2PD300C17M	-55℃～+125℃	
T_{stg}	Storage temperature	2PD300C17I	-55℃～+105℃	℃
		2PD300C17J	-55℃～+125℃	
		2PD300C17M	-60℃～+130℃	

Notes:
When work under +85℃ ~ +105℃,reduce 30% power of the driver;
When work under +105℃ ~ +125℃,reduce 50% power of the driver.

Electrical characteristics					
Symbol	Parameter	Value			Unit
		Min.	Typ.	Max.	
VDD	voltage supply DC/DC converter	14	15	16	V
VDC	voltage supply electronics input side	14.5	15	15.6	
I_{SO}	Supply current primary side (no load)		100		mA
	Supply current primary side (max)			500	mA
V_i	Input signal voltage on/off		15/0		V
$V_{G(on)}$	Turn on gate voltage output		+15		V
$V_{G(off)}$	Turn off gate voltage output		-15		V
I_{OMAX}	Max drive current		30		A
$t_{d(on)}$	Turn-on propagation time		0.7		us
$t_{d(off)}$	Turn-off propagation time		0.9		us
$t_{d(err)}$	Error propagation time			2	us
T_{rst}	Error reset time		200		ms
C_{PS}	Coupling capacitance primary secondary		18		pF
W	Weight		50		g
MTBF	Mean time between failure (Ta=40℃,max load)		1.8		10^6h

2. 2PD300C17 Block Diagram

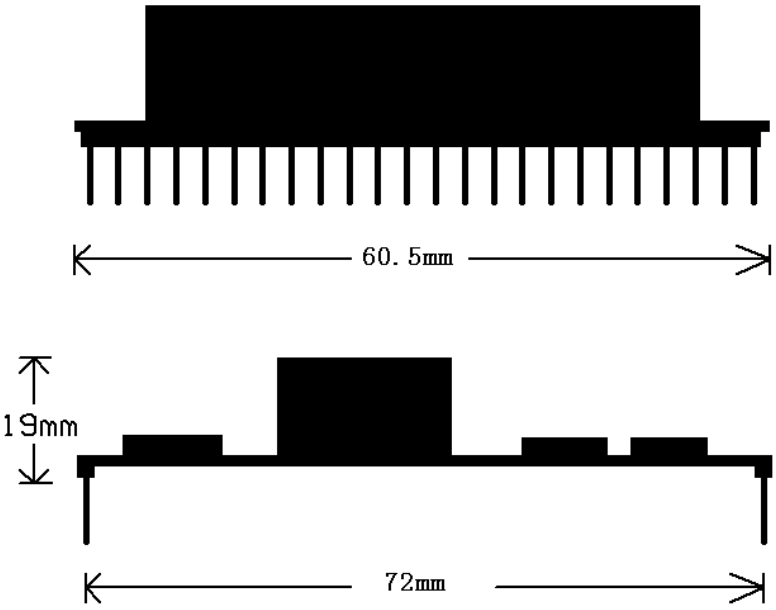

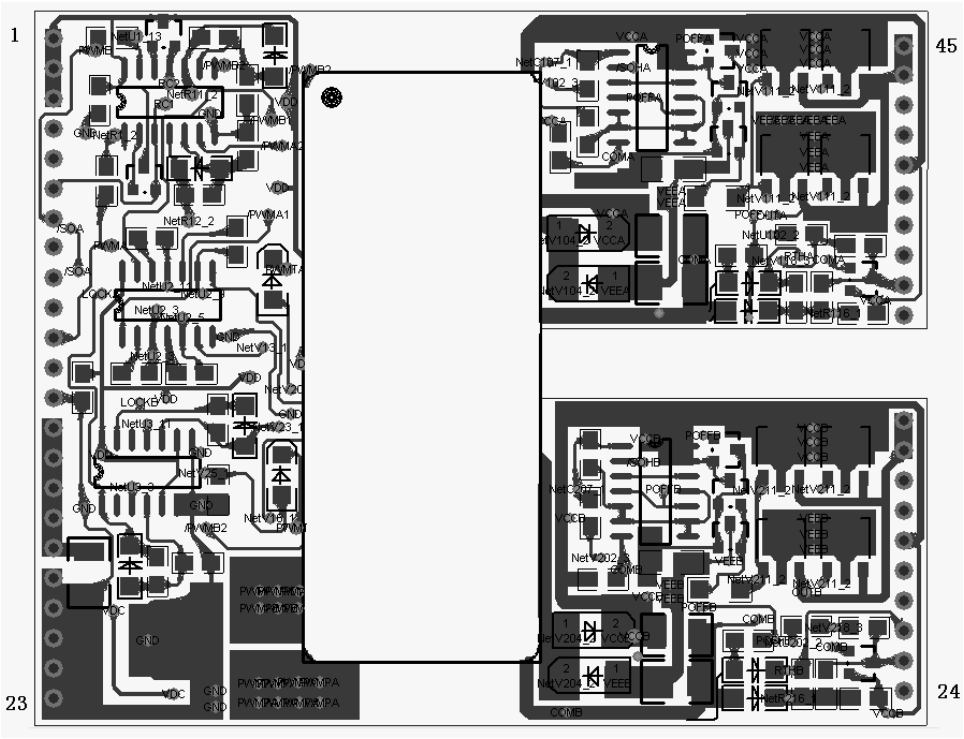

2PD300C17 Dimensional Diagram (Pin distance: 2.54mm)

Pin Des.	Function	Pin Des.	Function
1	VDD +15V for electronic input side	6 CA	Dead time set channel A
2	VDD +15V for electronic input side	7 INB	Input channel B
3	VDD +15V for electronic input side	8 CB	Dead time set channel B
4 Fault A	Fault output channel A	9 MOD	Work mode set
5 NC		10 Fault B	Fault output channel B

11	INA	Input channel A	
12	GND	Electronic input side	
13	GND	Electronic input side	
14	VDC	Inside DC/DC +15V input	
15	VDC	Inside DC/DC +15V input	
16	VDC	Inside DC/DC +15V input	
17	VDC	Inside DC/DC +15V input	
18	VDC	Inside DC/DC +15V input	
19	GND	Ground DC/DC converter	
20	GND	Ground DC/DC converter	
21	GND	Ground DC/DC converter	
22	GND	Ground DC/DC converter	
23	GND	Ground DC/DC converter	
45	Gate A	Gate output channel A	
44	Gate A	Gate output channel A	
43	COMA	Common channel A	
42	COMA	Common channel A	
41	VA+	V+ channel A	
40	VA-	V- channel A	
39	sense A	Clamp input channel A	
38	RCA	RC set channel A	
37	Vce A	Collector detect channel A	
36	NC		
35	NC		
34	NC		
33	Gate B	Gate output channel B	
32	Gate B	Gate output channel B	
31	COMB	Common channel B	
30	COMB	Common channel B	
29	VA+	V+ channel B	
28	VA-	V- channel B	
27	sense B	Clamp input channel B	
26	RCB	RC set channel B	
25	Vce B	Collector detect channel B	
24	NC		

3. Application example

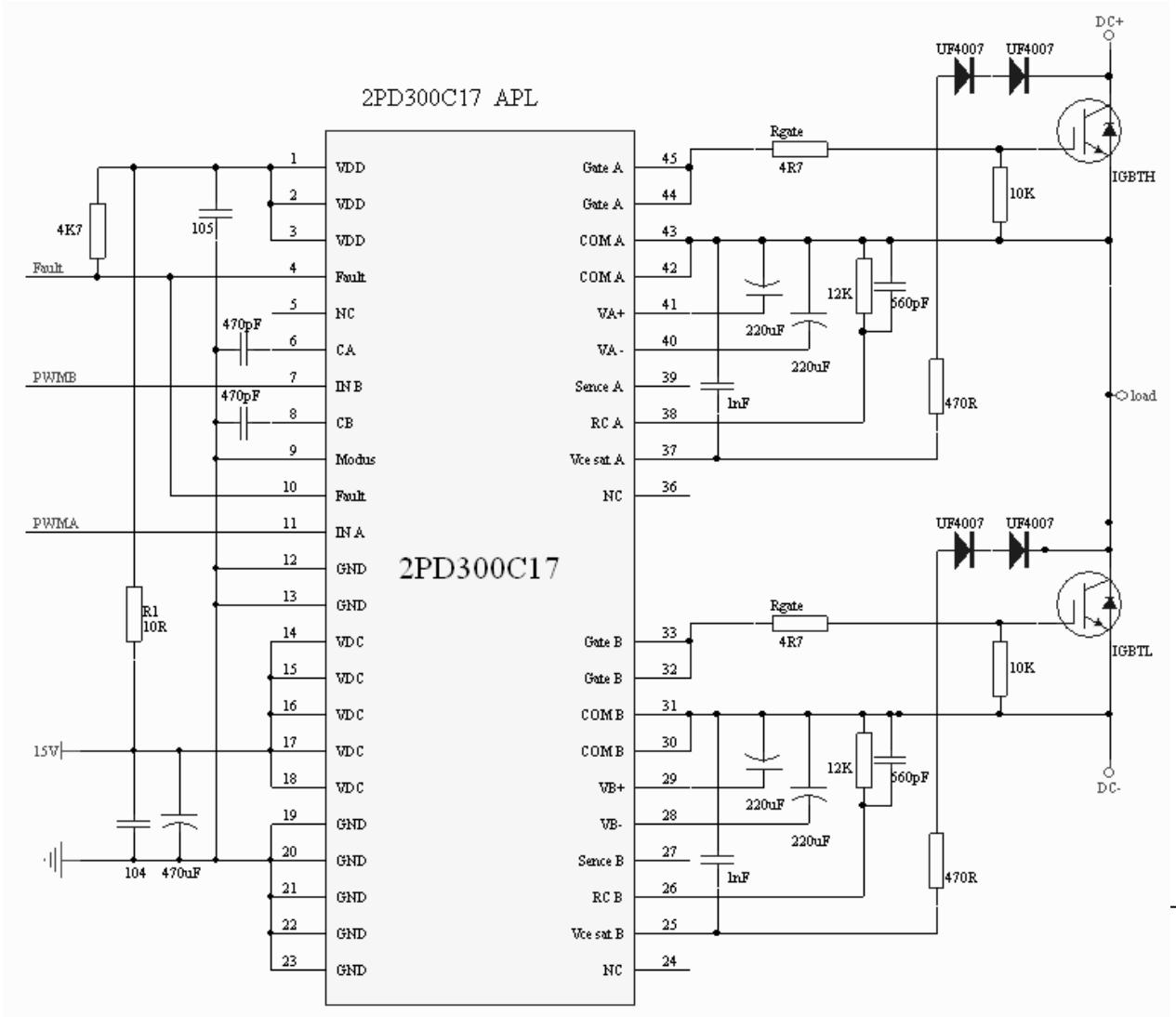

4. Overview of WEPOWER series High Power IGBT Intelligent Driving Module

(1) More reliable operation (Gate bipolar power supply with +15V/-10V is suitable for IGBT of any manufacturer.The gate is driven by negative voltage which increases capacity of anti-interference and more parallel IGBTs can be driven.)

(2) True electrical isolation. (The transformer isolation technology is used for each channel of drivers to reach better insulation properties and lower coupling capacitance.)

5. Operation Principle

5.1 Block diagram

2PD300C17 high-power IGBT intelligent driving module mainly consists of internal DC / DC converting circuit and IGBT Intelligent driving circuit which is formed by a logic processing circuit, a power drive and detection circuits. The block diagram is shown below.

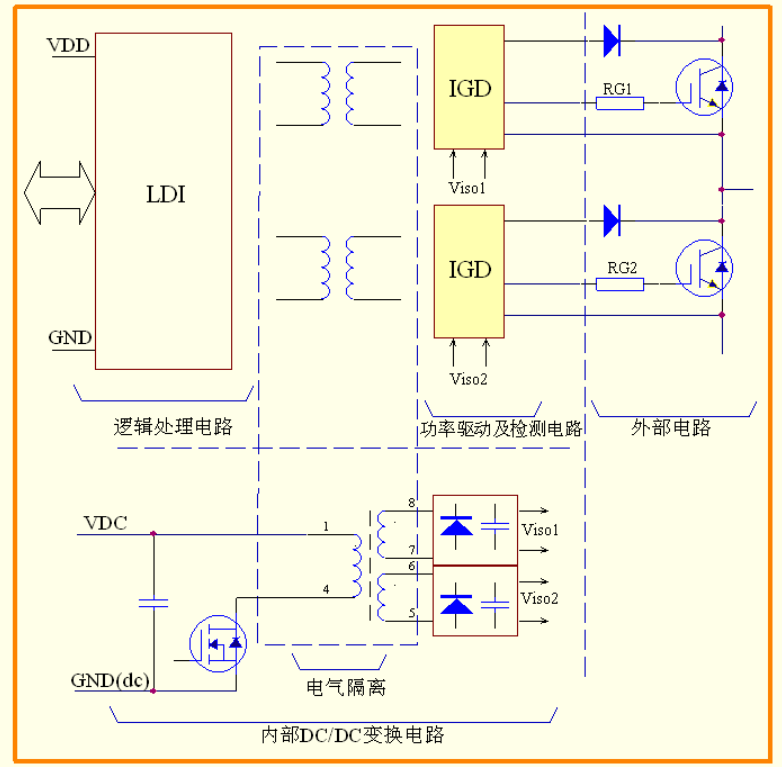

LDI is a logic signal processing circuit. IGD is an intelligent gate driver and power expansion circuit. The non-core pulse transformer is used to

transmit signals and feedback the signal between LDI and IGD.
IGD intelligent gate driver circuit

For each driving channel, there is an intelligent gate driver circuit IGD in which all function circuits such as intelligent drive, overload and short circuit protection, temporal logic blocking the signal, state identification, power supply and output monitoring circuits are integrated.

Integrated DC / DC power supply

All of the standard series of WEPOWER high-power IGBT intelligent drive module includes a DC / DC converter for each channel to provide drive voltage. Therefore, drivers need only a stable 15V DC power supply.As for different application,especially the different switching frequency and power valve gate charge, WEPOWER offers different driving power. Internal DC/DC drive power of 2PD300C17 is 2*3W.

5.2 Protection Features

The IGBT V_{CE} detection circuit is set in each channel of WEPOWER intelligent driver. Once the fault of low-voltage of output and over voltage of threshold voltage (to set through Cx) is detected, shutdown signal will generated by the module. The drive board begins to turn off the power device (With soft switch-off function), and it does not receive drive signals, the "failure" message will feedback to the LDI, FaulyX will output low level. The driver will not accept any driving signal until the "blocking" time has elapsed (200ms) and re-start.

5.3 Operation Mode

2PD300C17 has two kinds of working mode: direct mode and half-bridge mode.

When Pin MOD connected to high level, the module is under direct working mode.Channel A and B is working independently and not effect each other. When module is under direct work mode, if dead time set is needed, connect capacitor to Pin RC1 & RC2 and Pin GND to set. If dead time set is not needed, Pin RC1 & RC2 can be not connected.

When Pin MOD connected to low level, the module is under half-bridge work mode. Channel A and B can not work at the same time. If INA & INB are high or low at the same time, the driver will shut-off the output of channel A & B. The dead time of two channels can be set through connection of capacitor between Pin CA& CB and Pin GND. See below diagram:

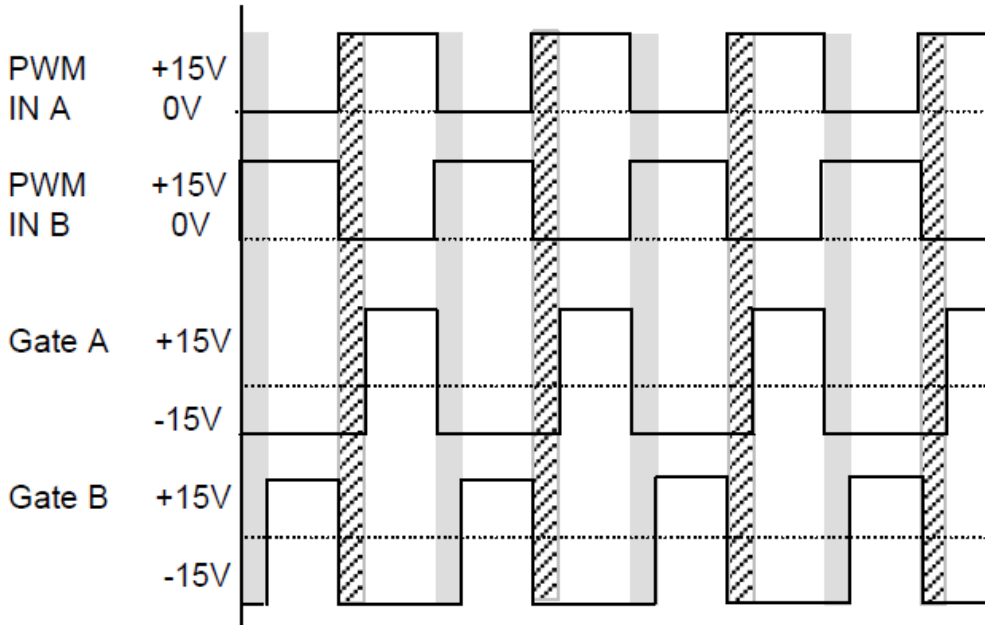

5.4 The Pin Designation

5.4.1 The Input Side

Pin GND
Pin GND is connected to the ground of the electronic power supply, if several GNDs are present, all GNDs should be connected to ground.

Pin VDC (voltage supply DC/DC converter)
It is recommended that a filter capacitor is inserted between VDC and GND.

Pin VDD (control circuit +15V power supply)

Pin INA (signal input A)
INA is the input terminal of channel A, high level is effectively.

Pin INB (signal input B)
INB is the input terminal of channel B, high level is effectively.

Pin MOD (working mode selection)
When pin MOD connected to high level, the module is under direct work mode, when pin MOD connected to low level, the module is under half-bridge work mode.

Pin FaultX (Status output terminal)

"x" stands for number of channel, FaultX output is an open collector transistor.If Faultx connects to +15V power supply by a pull-up resistor, once the drive channel was detected with error the power semiconductor break-over and FaultX will be pull-down. In normal occasion, the power semiconductor output is not break-over. The drive power for output terminal is 100mA.

Pin Cx (Dead time setting)

"x" stands for number of channel, it is used to set dead time between two channels through connect external capacitor.

Del.time T_{TD}	CA/CB
1.8uS	n.c
2.0uS	47pF
2.4uS	100pF
3.0uS	150pF
3.5uS	220pF
4.4uS	330pF
5.0uS	470pF
9.0uS	1npF

5.4.2 The Power Side

Pin GateX (Gate output terminal)

"x" stands for the number of the drive channel. The output G is the output for the gate drive and connected to G of IGBT. The driving voltage of WEPOWER series high power IGBT drivers are +15/-15V. The maximum permissible gate current for 2PD300C17 is ±15A.

Pin COMx

"x" stands for the number of the drive channel. COMx is the COMMON for change 1 and channel 2 of power side and connected to E of IGBT at the same time.

Pin VA+X (power supply of power side)

"x" stands for the number of the drive channel. +15V power output of channel A & B.

Pin VA-X (power supply of power side)

"x" stands for the number of the drive channel. -15V power output of channel A & B.

Pin RCX (over current threshold voltage protection setting)

"x" stands for the number of the drive channel. It is to set the threshold voltage protection value and detection delay time through connect external

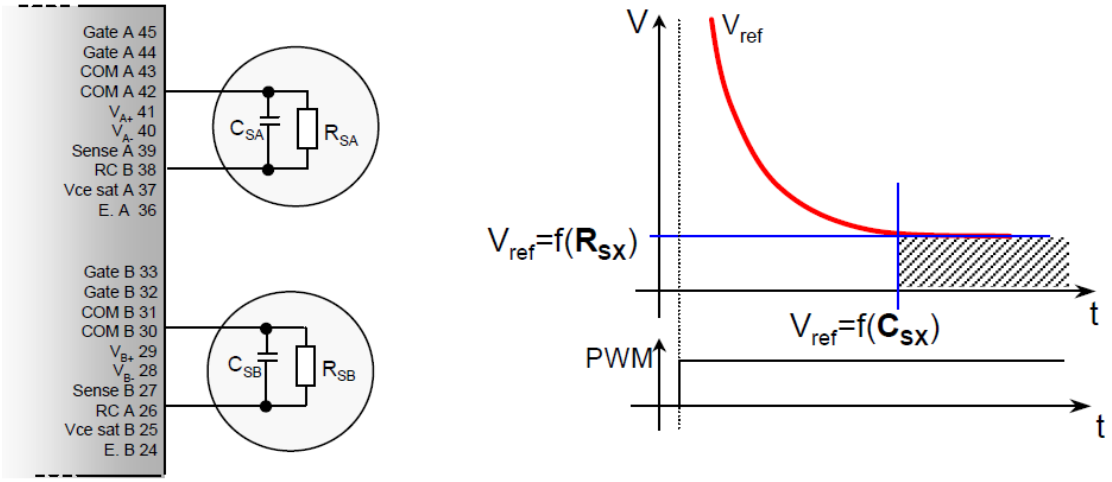

Vref	Rsx	Csx=0pF	Csx=100pF	Csx=220pF	Csx=470pF
2V	2K	0.5uS	1.5uS	3uS	5uS
4V	5.6K	0.5uS	3uS	4uS	9uS
6V	12K	1uS	4uS	6uS	
8V	33K	1uS	5uS	7uS	
9V	70K	1uS	5uS	7uS	

Pin V_{CE}X (detection terminal of Collector)

"x" stands for the number of the drive channel. It is used to measure the conduction voltage drop of the power semiconductor and get short circuit and over load protection.Pin Cx can not be connected to C of IGBT directly. We can use high voltage diodes to detect big leakage current or collector voltage when shut-off. For 1200V and 1700V IGBT modules, it is recommended to connect two or three pieces of fast recovery diodes in series connection. And the voltage of these diodes be over dimensioned by at least 40%.

Pin SenseX (Clamping pin)

"x" stands for the number of the drive channel. It is connected to C of IGBT through TVS diodes. It will protect the IGBTs not be breakdown by over voltage when shut-off the IGBT modules.

5.4.3 Layout and wiring

Wires should be placed as close as possible to the power semiconductors. Lead wire lengths is better to be 10 cm and twisted.

It is also recommended to place two zener diodes connected in counter-series immediately between the gate and emitter of the IGBT to stable the threshold voltage.

6. Calculation of driving power

Gate input capacitance (Cin) can be found in the data sheet. The total power need to drive IGBT can be calculated by the following simple formula:

$P=f*Cin*\triangle V^2$ OR $P=f*Q*\triangle V$

Gate charge $Q=\int idt=C*\triangle V$

(Note: P represents the real driving power not including the losses in drive channel and drive power supply.)

WEPOWER

WEPOWER TECHNOLOGY CO., LTD
NO. 2 YUEHE ROAD, XIXIANG TOWN,
BAO'AN DISTRICT, SHENZHEN,
CHINA 518102
TEL: +86-755-27796280
FAX: +86-755-27914685
Email: info@wepowertech.com
Http://www.wepowertech.com